kader Academy

Machine Safety Specialist (CE)

Module 2: Electrical, hydraulic and pneumatic installation

TAB4: Risk reduction and standards
Tab4-2/9 20240816

kader Academy

1

Tab4-2/9-Sh.2

Electrical installation of machines

This module:

- EN-IEC 60204-1:2018 Electrical equipment of machinery
- EN-ISO 4413:2010
- Hydraulics - General rules and safety requirements for systems and their components
- EN-ISO 4414:2010

Pneumatics - General rules and safety requirements for systems and their components

2

Tab4-2/9-Sh.3

Electrical equipment

EN-IEC 60204-1,
Electrical equipment of machinery:
For: Machines (CE marking)
Not for: Electrical installations (Separation at connection point)

NEN 1010 (Dutch regulation),
Safety provisions for low-voltage installations:
For: Installations
Not for: Special installations or parts for which separate standards exist.

EN 50110-1 and -2,
Working safely on electrical installations:
NEN 3140 Low voltage ≤1000VAC / ≤ 1500VDC
NEN 3840 High voltage >1000VAC / > 1500VDC

EN-IEC 61439-1
Low-voltage switchgear and controlgear assemblies - Part 1: General rules

Tab4-2/9-Sh.4

Electrical equipment of machines

EN-IEC 60204-1: 2018
Safety of machinery – Electrical equipment of machines – Part 1: General requirements

NEN-EN-IEC 60204-1
(nl)

Veiligheid van machines - Elektrische uitrusting van machines - Deel 1: Algemene eisen

Safety of machinery - Electrical equipment of machines - Part 1: General requirements

Main and operating switch

Requirements main switch (supply disconnecting device) machine

- Each machine must be equipped with a possibility to separate the (main) power supply (de-energize / secure)
- Examples:
  - Switch-disconnectors (with or without fuse-links)
  - Power circuit breaker which is suitable for separation
  - Plug/Socket combination (usually for smaller power)
- The main switch must be lockable in the 'off position' and may therefore also be used as a 'prevention of unintentional start-up'
- The control element of the main switch must be located on the outside of the control cabinet
- The main switch must be 'safely' accessible and at a height of at least 0.6m and a maximum of 1.9m above the 'floor'
- Sometimes additional devices are also used within the machine to prevent unexpected switch-on. In the Netherlands, these are called 'work switches'.

Main and operating switch

Wiring

(NEN-EN-IEC 60204-1, 13.1)

Connections must be protected against accidental disconnection, especially the connections of the protection chain.
Connection of two or more conductors to a single terminal is permitted only if the terminal is designed for that purpose.

Please note!
In the protection chain (earth), only one protective conductor may be connected per terminal at any one time.

Wiring

The connection must be suitable for the cross-section and type of conductors to be connected (also applies to solder joints);

- Wiring that does not run through a gutter or hose must be well supported;
- Wiring outside an enclosure/shield must be done via enclosed cable ducts or hoses intended for this application;
- Terminal blocks must be mounted and wired so that the internal and external wiring do not cross the terminals;
- Flexible cables and conduits must be laid in such a way as to allow fluid to drain away from the connection point;
- Electrical cables must run from one terminal to the other without welding or intermediate branches.

Tab4-2/9-Sh.9

Wiring

Identification of the protective conductor:

- The protective conductor must be easily distinguishable by shape, location, marking or colour.
- If identification is made on the basis of colour only, the two-colour combination GREEN-YELLOW must be used along the entire length of the conductor.
- Identification with this two-tone combination is strictly reserved for the protective conductor

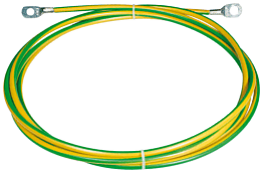

Tab4-2/9-Sh.10

Wiring

Identification of the neutral conductor:

- Where a circuit contains a neutral that is identified by color alone, the color used for this conductor must be BLUE.
- To avoid confusion with other colours, it is recommended to use an unsaturated shade of blue, which is indicated here as "light blue".
- Where the chosen colour is the only indication on the neutral and there is a possibility of confusion, that colour may not be used for any other conductor.

Wiring

When using color codes for the identification of current conductors, it is recommended to use the following color codes:

- BLACK: Main power chains, alternating current and direct current;
- RED: Control current chains, alternating current;
- BLUE: Control current circuits, direct current;
- ORANGE: Power chains that do not need to be separated / external source;

Equipotential bonding and protection line

Protective bonding of potential*(protective bonding)*

- Intended for the protection of persons against electric shock caused by indirect contact (chain of protection).
- electrically conductive parts that may become live due to an error/damage.

Equipotential bonding for functional purposes*(functional bonding)*

- Goal, to reduce:
  - *the adverse effects of an insulation fault on the correct functioning of the machine;*
  - *the adverse effects of electrical interference signals on sensitive electrical equipment on the correct functioning of the machine;*
  - *damage to the electrical equipment due to lightning strikes*

Let op: dit heeft niets met een ‘aardlek’ te maken!

Tab4-2/9-Sh.13

Equipotential bonding and protection line

Connections designated as protective conductors (PE):

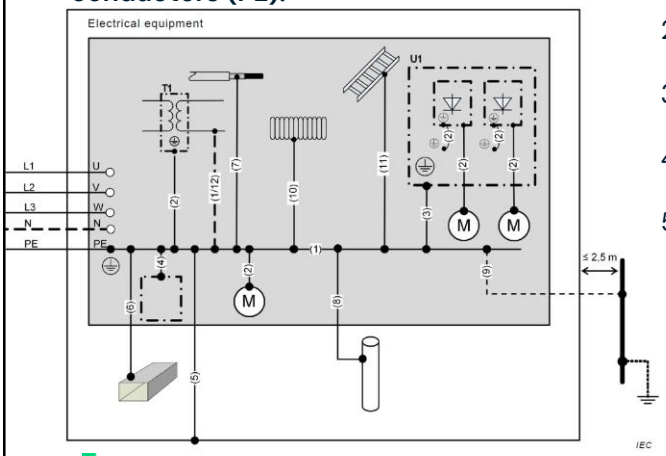

1. Connection of the protective pipe(s) and the 'PE connection terminal'.
2. Connections of 'reachable' electrically conductive components.
3. Connection of mounting plates which serve as protective conduit.
4. Connection of structural parts belonging to the electrical installation
5. Connection of structural parts of the machine.

Tab4-2/9-Sh.14

Equipotential bonding and protection line

Parts that must be connected to the protective bonding:

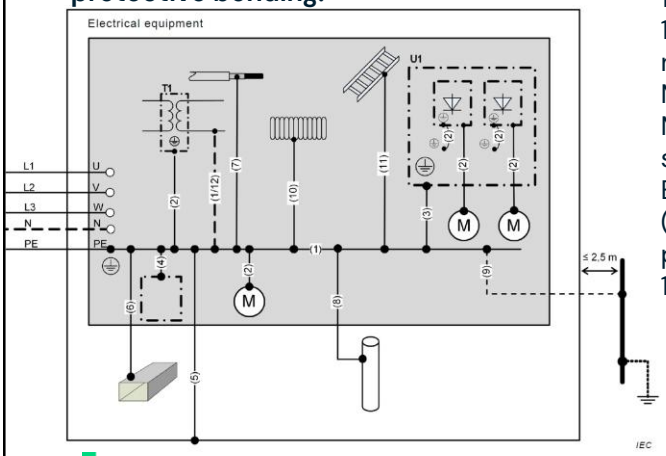

6. Metal wire trays,
10. cable trays, cable ladders,
11. cable ducts, installation pipes (flexible or not)

Metal cable sheaths, reinforcement, shielding.
Metal piping intended for flammable (liquid) substances or gases.
External conductive parts in the vicinity (≤2.5m) of the machine between which a potential difference may occur.

12. Equipotential bonding for good Functioning of the machine (control/EMC).

Equipotential bonding and protection line

In summary, the following parts must be connected to the protection chain:

- Conductive structural parts of the machine with a touchable surface greater than 50mmx50mm or where there is a risk that a fault may cause that part of the machine to become lively.
- Metal wire trays, cable trays, cable ladders, cable ducts, installation pipes (flexible or not)
- Metal cable reinforcement or shielding
- Metal piping intended for flammable (liquid) substances or gases

Equipotential bonding and protection line

Requirements assembly:

- Attachment in such a way as to prevent accidental loosening
  - *use e.g. spring washers*

  The connection of several protective lines to one connection point is only permitted if this connection point is intended for this purpose.

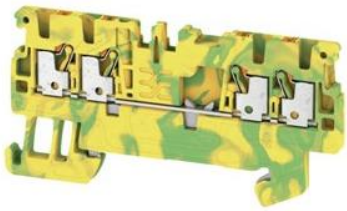

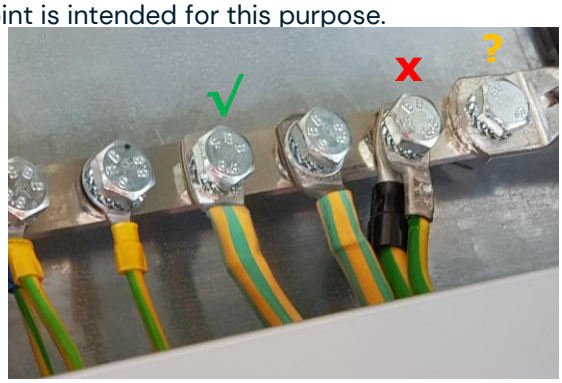

Equipotential bonding and protection line

Assembly requirements:

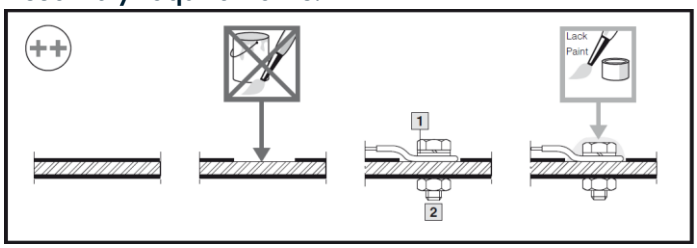

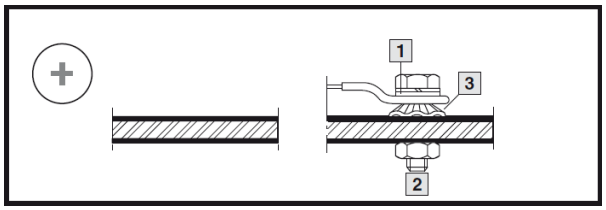

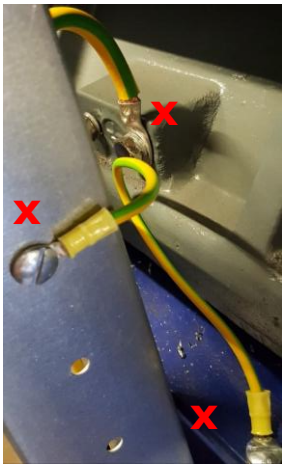

Protection in connection with lighting and earth faults

- Overcurrent protection of (control cabinet or machine) lighting may not be combined with e.g. service sockets. Lighting must be equipped with its own separate overcurrent protection (circuit breaker).
-
- Goal to prevent that due to an error in a connected device (in a service socket) the lighting would fail if a circuit breaker were to trip.

All ungrounded conductors of circuits used to supply lighting must be protected against the effects of short circuits by overcurrent protection devices, independently of those used to protect other power chains.

Control functions in the event of malfunctions

*Where a breakdown or malfunction of the electrical equipment **may lead to a hazardous situation** or to damage to the machinery or work in progress, **appropriate measures** must be taken to minimise the likelihood of a breakdown or breakdown occurring.*

Measures:

- Use of switching techniques and components whose reliability has been proven in practice
- Applying redundancy / diversity
- Applying functional tests

Control functions in the event of malfunctions

Example of frequently used switching technology with regard to control current circuits to prevent dangerous situations due to earth faults:

Grounded control circuits powered by transformers / DC power supplies:

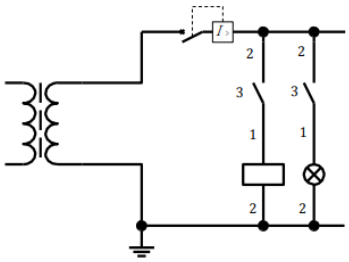

Legenda

1 geschakelde stroomgeleiders
2 gemeenschappelijke stroomgeleiders
3 stuurstroomschakelaars

Control functions in the event of malfunctions

Defects in operation, control or energy supply do not cause:

- Unexpected start
- Prevention of discontinuation
- Drop or eject workpiece
- Failure of protective devices

Make sure that no operating commands can remain active that can cause a machine movement to restart automatically in the event of a reset. The same applies to the return of the food after failure.

Degree of protection and sealing IPxx

Digit 1:

- IP 0x - not protected
- IP 1x - protected against objects with a diameter larger than 50 mm
- IP 2x - protected against objects with a diameter larger than 12 mm
- IP 3x - protected against objects with a diameter larger than 2.5 mm
- IP 4x - protected against objects with a diameter larger than 1 mm
- IP 5x - protected against dust
- IP 6x – dustproof

Digit 2:

- IP x0 - not protected
- IP x1 - dripping water protected
- IP x2 - protected against dripping water at an inclination of up to 15°
- IP x3 - protected against spraying water up to 60°
- IP x4 - protected against splashing water (all directions)
- IP x5 - protected against water jets (all directions)
- IP x6 - protected against downpours
- IP x7 - submersible protected (30 minutes up to 1 meter deep)
- IP x8 - protected against staying underwater
- IP x9 - protected against high-pressure spraying

Pneumatics or hydraulics in control cabinet

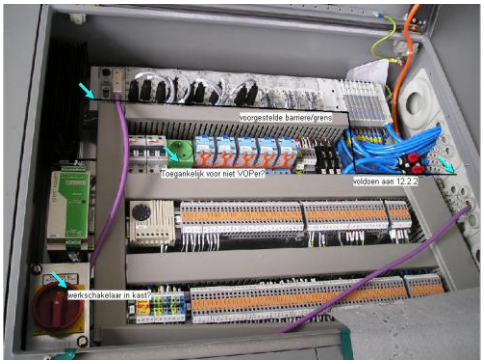

Pneumatics or hydraulics in control cabinet

Non-electrical parts and appliances not directly attached to the electrical equipment must not be placed inside the casing containing the switchgear!

Considerations:

- Omaintenance and adjustment to non-electrical parts does not necessarily have to be done by electrical experts
- Fueling a fire after a short circuit caused by oil or air
- Damage to E-components due to broken or broken pipes
- Leakage can cause a short circuit
- Polluted air has a negative impact on air and creepage distance.

Solutions:

- Compartmentalization at least IP 2x
- Short tie off pipes
- Electrical components near hydraulics IP 54.

(CE) Marking a control cabinet

- Durable and resistant to expected environmental conditions
- Provided with the name of the supplier
- Trademark or other symbol identifying supplier
- If required hallmark mark.

- No CE under Machinery Directive
- No IIA or IIB statement
- No CE under Low Voltage Directive

- In exceptional cases, CE on the basis of EMC and LR

Risk of electrical voltage, if it is not clear that it is an electrical control box.

Documentation

Information necessary for installation, operation and maintenance of electrical equipment of a machine.

Info over:
- Normal operating conditions, including expected power supply and environmental conditions,
- handling, transport and storage,
- Improper use of equipment.

Examples:
- Installation diagram, block diagram, flow diagram, starting currents, security equipment settings, adjustment, timer settings, information about special components (flow measurement), warnings, etc.

Hydraulics and pneumatics

EN-ISO 4413: 2010 en
- Hydraulics - General rules and safety requirements for systems and their components

EN-ISO 4414: 2010 en
- Pneumatics - General rules and safety requirements for systems and their components

INTERNATIONAL STANDARD
ISO 4413
Third edition 2010-11-15
Hydraulic fluid power — General rules and safety requirements for systems and their components
Transmissions hydrauliques — Règles générales et exigences de sécurité relatives aux systèmes et leurs composants

INTERNATIONAL STANDARD
ISO 4414
Third edition 2010-11-15
Pneumatic fluid power — General rules and safety requirements for systems and their components
Transmissions pneumatiques — Règles générales et exigences de sécurité pour les systèmes et leurs composants

Hydraulics and pneumatics

General requirements (good workmanship):
- Use suitable components
- Prevention of impermissible high or low pressure
- Securing options (lockable main valve/main air valve)
- Prevent unauthorized use (e.g. components in lockable cabinet)
- Coding (Exclusion of Incorrect Assembly)
- Pipes sufficiently supported
- Safety function components: suitable components/valves

Tab4-2/9-Sh.29

Hydraulics and pneumatics

Pneumatics:
- High noise exposure: silencers
- Proper installation of valves
- Components and pipes free of moisture (frost-free)

Hydraulics:
- Collection container in case of flooding
- Pipes near operators (double-walled or shielded)
- Pressure limitation
- Shielding or warning against excessive temperatures
- Venting, preventing air bubbles from remaining
- Sufficiently large drip tray under tank

Tab4-2/9-Sh.30

Documentation

Information necessary for installation, operation and maintenance of hydraulic or pneumatic installation of a machine.

Info over:
- Normal operating conditions, expected conditions, environmental conditions, working pressure, temperature, flow.
- Depressurization and securing procedures.
- The hydraulic fluid to be used, fill, change, clean, bleed, drain.
- Required maintenance and spare parts.
-
- Etc.

kader
Academy